CHING FENG
HOME FASHIONS



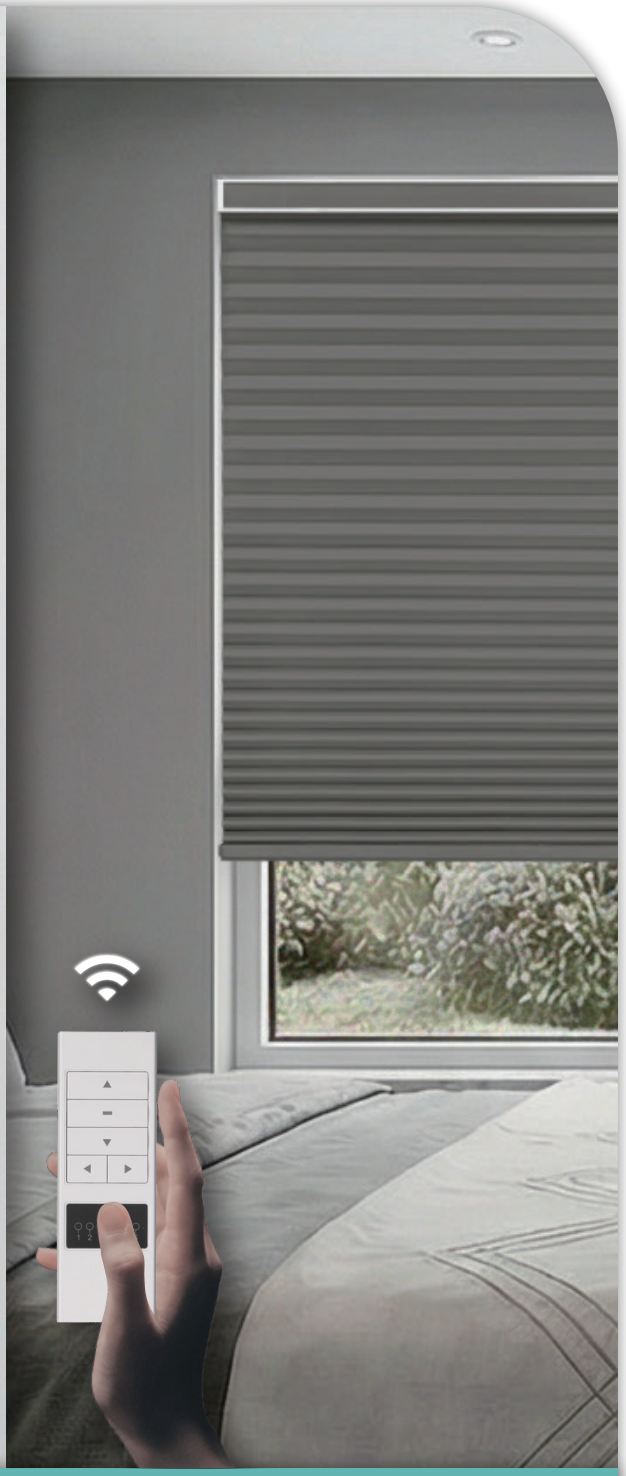

Motorized Cellular Shades

Combining modern design with smart functionality, these motorized cellular shades deliver reliable performance and everyday convenience. Quiet operation, extended battery life, and simple remote control make them easy to specify and install across residential and light commercial projects. A versatile solution for contemporary window treatment programs.

INDEX



001

1.5”/ 1.75” (38mm / 45mm) Motorized Aluminum Cellular Shades



CHING FENG
HOME FASHIONS



38mm/45mm Motorized
Aluminum Cellular Shades

Model No: CS-25D2 / CS-26D2 / CS-2ID2 / CS-2JD2

CERTIFIED BEST FOR KIDS™

PARENTS FOR LAB TESTED Mom APPROVED WINDOW BLIND SAFETY™

Cellular



Product Introduction

Designed as a smart window covering solution, this motorized window system combines sustainable materials with modern convenience. The quiet motor and integrated power system support reliable, low-maintenance operation, while remote control functionality enables easy integration into everyday smart living environments. With a clean design and practical performance, it is well suited for residential and light commercial projects seeking smart, energy-efficient solutions.

SPECIFICATIONS

Cell Width	38mm / 45mm
Width Range	23”- 96” (Customized available)
Length Range	24”- 84” (Customized available)
Running (In regular use)	180 days
Battery Capacity	2600mAh
Color	Light filtering / Blackout -16 colors available Simply White / Ivory / Morning Mist / Cool Willow / Linen / Gray Sage / Classic Beige / Smoky Gray / Dusty Pink / Desert Sand / Toffee / Coffee Bean / Aqua Blue / Blue Gray / Anchor Gray / Black
Material	100% rPET
Control	Remote Control
Mount Type	Inside & Outside Mount
Mounting Bracket	Mounting Bracket
Width Deduction	½”, ¼” or Customized per Requirement

Features & Benefits

RECYCLED POLYESTER

100 %

Sustainable Recycled Fabric

- Made with 100% rPET, supporting sustainability-focused product programs.
- D-shaped cellular structure helps enhance fabric stability and overall performance.

MOTOR NOISE BELOW

50 dB

Quiet Motor Operation

- Motor noise operates below approximately 50 dB for a smooth, low-noise experience.
- Suitable for residential and light commercial spaces where quiet operation is preferred.

FULLY CHARGED BATTERY LASTS APPROXIMATELY

180 days

Long-Lasting Rechargeable

- Battery Fully charged battery supports up to approximately 180 days of regular use.
- Integrated rechargeable design reduces the need for frequent charging and maintenance.

REMOTE CONTROL OPERABLE WITHIN

15 meters

Convenient Remote Control

- Remote control operation supported within a range of up to 15 meters.
- Allows easy adjustment of shades for everyday use and project applications.

BUILT-IN RECHARGEABLE

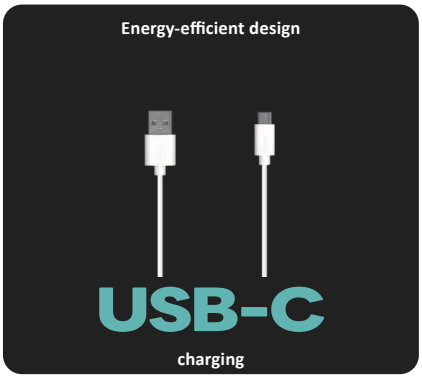

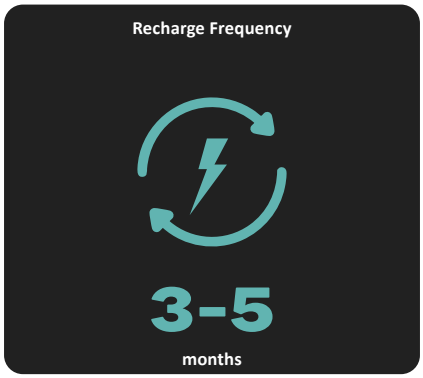



Smart Motorized Cellular Shades vs. Manual Cellular Shades

Feature	Manual Cellular Shades	Smart Motorized Cellular Shades
Operation Method	Hand operated by lifting / lowering	↗ Remote
User Effort	Requires physical effort	↗ Effortless automatic operation
Accessibility	Hard to reach tall / wide windows	↗ Ideal for high, large, or hard-to-reach windows
Light & Privacy Control	Basic manual adjustment	↗ Precise programmable light control
Smart Home Integration	Not available	↗ Compatible with smart home systems
Daily Convenience	Must adjust manually each time	↗ Scheduled, timed, and automated control



Compliance Summary



WCMA	Compliant
PFWBS	Compliant
FCC	Compliant

Measurement Guide

HOW TO MEASURE - CELLULAR SHADES

INSIDE MOUNT

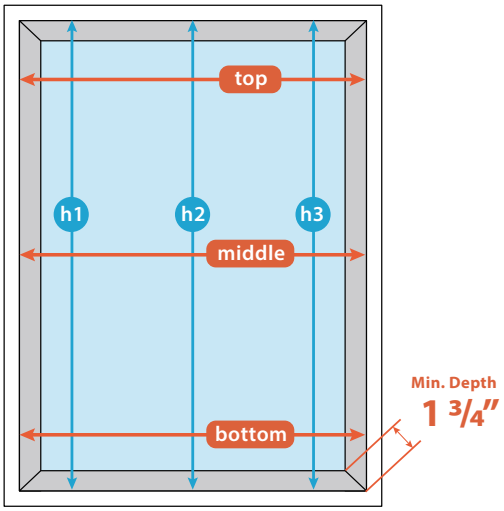

- Width:
  Step 1: Measure the width at the top, middle, and bottom inside of your window opening. Use the **smallest** measurement.
  Step 2: **Subtract ¼** inch from that number.
  Step 3: Round **down to the nearest size** when ordering.
- Height: **Largest** of inside framed height (h1, h2, h3). Choose the height that matches or exceeds the window length.
- Depth: **1 3/4"** required. Ensure no obstacles.

OUTSIDE MOUNT

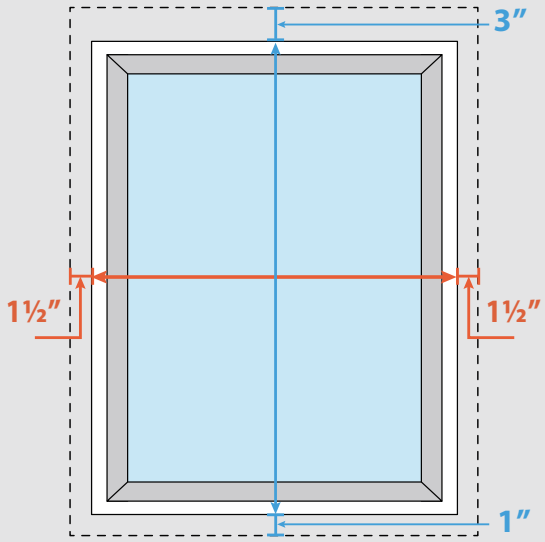

- Width: Include window trim and **add 1½" on each side**. Round up the nearest width when ordering.
- Height: Include window trim and **add 3" on top, 1" on the bottom**. Choose the height that matches or exceeds the window length.
- Minimum **3"** flat surface above the window required.

The blind width ordered is the actual width
(no width deductions taken).

CHING FENG
HOME FASHIONS

Motorized Cellular Shades

16
COLORS
AVAILABLE

LIGHT FILTERING / BLACKOUT

SIMPLE WHITE	IVORY	MORNING MIST	COOL WILLOW
LINEN	GRAY SAGE	CLASSIC BEIGE	SMOKY GRAY
DUSTY PINK	DESERT SAND	TOFFEE	COFFEE BEAN
AQUA BLUE	BLUE GRAY	ANCHOR GRAY	BLACK

- Remote Control
- Integrated Battery
- Smooth & Silent
- D Shape Design
- Eco - Friendly
- Easy Care
- Customized
- Easy Installation

SIZE OPTIONS

Width	23”- 96” (Customized available)
Drop	24”- 84” (Customized available)