CHING FENG
HOME FASHIONS



# Mini Blinds

1 inch mini blinds feature a clean, versatile design built for everyday use. Adjustable slats allow easy control of light and privacy, while the simple construction, easy care, and flexible installation make them suitable for a wide range of interior applications.

# INDEX




001

1” Cordless Vinyl Room Darkening Mini Blinds 01



002

1" Cordless rPET Room Darkening Mini Blinds 05



003

1” Cordless Aluminum Room Darkening Mini Blinds 09




CHING FENG
HOME FASHIONS



UP
Upgraded

# 1” Cordless Vinyl
## Room Darkening Mini Blinds

Model No: QL

CERTIFIED BEST FOR KIDS™

PARENTS FOR LAB TESTED Mom APPROVED WINDOW BLIND SAFETY™

BLINDS





# Product Introduction

Upgraded slat construction provides enhanced durability and a more premium feel, while improved coverage helps create better light control and privacy. The child-safe cordless lift ensures smooth, worry-free operation. Available in custom cut-to-width or ready-made sizes, with versatile installation options for quick and easy setup.

## SPECIFICATIONS

| | |
|---|---|
| **Product Name** | 1” Cordless Vinyl Room Darkening Mini Blinds |
| **Model No.** | QL |
| **Slat Width** | 1 inch |
| **Width Range** | 23”- 72” ( Customized available ) |
| **Length Range** | 48”/64”/72” ( Customized available ) |
| **Color** | White |
| **Slat Material** | Room Darkening, PVC |
| **Control** | Wand Control / Cordless Lift System |
| **Mount Type** | Inside & Outside Mount |
| **Mounting Bracket** | Screw Mount / No-Tool Installation |
| **Width Deduction** | ¼”, ½” or Customized per Requirement |
| **Certification** | Child Safe, Cordless |
| **Slat Rigidity** | Enhanced rigidity compared to standard slats |
| **Break Strength** | Resists tension and deformation |
| **Bending Performance** | Bends without cracking or whitening |
| **CPSIA Total Lead Content** | Compliant |
| **UL 94 Flammability** | HF-1 Rated |

# Features & Benefits

## Premium Strength & Light Control

- Upgraded slat construction delivers enhanced durability and rigidity for long-term performance.
- Improved slat coverage helps achieve better light control and privacy, creating a more comfortable and room-darkening effect compared to standard PVC blinds.

## Child Safe Cordless Design

- Cordless lift eliminates hazardous cords to protect children and pets.
- Designed to meet current safety expectations for residential window coverings.

## Durable Vinyl Construction

- Designed for everyday durability with stable slat structure and consistent performance.
- Suitable for a variety of residential applications with easy maintenance.

## Easy Installation

- Compatible with multiple mounting options, including screw-mounted brackets, magnetic systems, and no-tool installation options.
- Designed for quick, straightforward installation across various applications.



Cordless



Light Blocking



Upgraded Thickness

# Upgraded PVC Slat Specifications Overview

| Feature | Standard PVC Slats | Premium PVC Slats |
|---|---|---|
| Slat Construction | Standard construction | ↗ Premium-level construction |
| Rigidity & Stability | Standard rigidity | ↗ Higher rigidity and stability |
| Slat Coverage | Standard coverage | ↗ Higher coverage |
| Light Control | Basic light control | ↗ Advanced light control |
| Overall Performance | Suitable for general use | ↗ Higher overall performance and durability |

Performance characteristics may vary by configuration and customer requirements.

Slat Construction Upgrade

Slat Density Upgrade

Light Control Performance Upgrade



CHING FENG
HOME FASHIONS



UP
Upgraded

# 1" Cordless rPET
## Room Darkening Mini Blinds

Model No. 1C

CERTIFIED BEST FOR KIDS™

PARENTS FOR LAB TESTED Mom APPROVED WINDOW BLIND SAFETY™

BLINDS



# Product Introduction

Designed with rPET material, these cordless mini blinds provide reliable durability, safety, and sustainability. The slat construction supports consistent light control and privacy, while performing well in high-humidity environments. A child-safe cordless system ensures smooth operation, with easy installation and flexible mounting options to support a wide range of residential and light commercial projects.

## SPECIFICATIONS

| | |
|---|---|
| **Product Name** | 1" Cordless rPET  Room Darkening Mini Blinds |
| **Model No.** | 1C |
| **Slat Width** | 1 inch |
| **Width Range** | 23"-72" (Customized Available) |
| **Length Range** | 48"/ 64" / 72"  (Customized Available) |
| **Color** | White |
| **Slat Material** | Room Darkening, rPET |
| **Control** | Wand Control / Cordless Lift System |
| **Mount Type** | Inside & Outside Mount |
| **Mounting Bracket** | Screw Mount / No-Tool Installation |
| **Width Deduction** | ¼”, ½” or Customized per Requirement |
| **Certification** | Child Safe, Cordless |
| **Slat Rigidity** | Higher slat strength and structural stability |
| **Break Strength** | Designed to withstand applied load and tension |
| **Bending Performance** | Resists deformation and maintains shape after bending |
| **CPSIA Total Lead Content** | Compliant |
| **UL 94 Flammability** | HF-1 Rated |

# Features & Benefits

## Sustainable  rPET Material

- Made with rPET content to support sustainability-focused product programs.
- Maintains consistent quality and stable performance for everyday applications.

## Reliable Light Control & Safety

- Cordless design supports safe use in environments with children and pets.
- Slat construction helps provide dependable light control and privacy.

## Durable Performance in Humid Environments

- Designed to perform well in high-humidity areas such as kitchens and bathrooms.
- Slats resist warping, fading, and sagging, and recover their shape after regular use.

## Easy Installation

- Compatible with multiple mounting options, including screw-mounted brackets, magneticsystems, and no-tool installation options.
- Designed for quick, straightforward installation across various applications.



Cordless



Moisture-Resistant



Shape-Retaining Slats

# rPET Slats Compared to Traditional PVC Slats

| Feature | Traditional PVC Slats | rPET Slats |
|---|---|---|
| Material Composition | Made from conventional vinyl material | ↗ Made with rPET content |
| Structural Character | Rigid structure with stable form | ↗ Naturally flexible with stable performance |
| Surface & Tactile Feel | Smooth and uniform finish | ↗ Refined texture with a softer visual and tactile feel |
| Durability | Designed for everyday residential use | ↗ Designed to deliver comparable long-term durability |
| Environmental Consideration | Standard material solution | ↗ Supports circular material use and resource efficiency |
| Application Focus | Suitable for general product programs | ↗ Well-suited for eco-conscious product lines and design-forward collections |

Performance characteristics may vary by configuration and customer requirements.

rPET Sustainable Material Solution

Refined Surface & Natural Texture

Flexible & Stable Material



CHING FENG
HOME FASHIONS



UP
Upgraded

# 1" Cordless Aluminum
## Room Darkening Mini Blinds

Model No. AB-2484

CERTIFIED BEST FOR KIDS™

PARENTS FOR LAB TESTED Mom APPROVED WINDOW BLIND SAFETY™

BLINDS



# Product Introduction

Featuring lightweight aluminum slats, these cordless mini blinds offer a clean, modern solution for light control and privacy. The slat construction supports consistent room-darkening performance while maintaining a sleek and uniform appearance. A cordless lift with wand control allows smooth, easy operation with enhanced safety. With flexible installation options and wide application suitability, this product is well suited for residential and light commercial projects.

## SPECIFICATIONS

| | |
|---|---|
| **Product Name** | 1" Cordless Aluminum Room Darkening Mini Blinds |
| **Model No.** | AB- 2484 |
| **Slat Width** | 1 inch |
| **Width Range** | 23"-72" (Customized Available) |
| **Length Range** | 48"/ 64" (Customized Available) |
| **Color** | White, (Customized Available) |
| **Slat Material** | Room Darkening, Aluminum |
| **Control** | Wand Control / Cordless Lift System |
| **Mount Type** | Inside & Outside Mount |
| **Mounting Bracket** | Screw Mount |
| **Width Deduction** | ¼", ½" or Customized per Requirement |
| **Certification** | Child Safe, Cordless |
| **Slat Rigidity** | Higher slat strength and structural stability |
| **Break Strength** | Designed to withstand applied load and tension |
| **Bending Performance** | Resists deformation and maintains shape after bending |
| **CPSIA Total Lead Content** | Compliant |
| **UL 94 Flammability** | HF-1 Rated |

# Features & Benefits

## Lightweight Aluminum Performance

- Lightweight aluminum slats allow easier handling and smoother daily operation.
- Provides a solid yet light feel compared to traditional PVC alternatives.

## Room Darkening Light Control

- Slat construction supports effective room-darkening performance for enhanced privacy.
- Helps create a more comfortable lighting environment across various spaces.

## Cordless Lift & Wand Control System

- Cordless design supports safer use in environments with children and pets.
- Wand control allows simple and intuitive adjustment with minimal effort.

## Smooth Operation & Practical Application

- Designed for smooth lifting and tilting in everyday use.
- Suitable for residential and light commercial applications with easy integration.



Cordless



Room Darkening



Lightweight Aluminum

# Aluminum vs. PVC Mini Blind Slats

| Feature | PVC Slats | Aluminum Slats |
|---|---|---|
| Material Type | PVC (vinyl) slats | ↗ Aluminum slats |
| Structure | Flexible, lightweight | ↗ Rigid structure, clean lines |
| Durability | Suitable for everyday use | ↗ Stable performance for daily use |
| Finish | Smooth, matte finish | ↗ Sleek metallic finish |
| Moisture Resistance | Moisture-resistant, ideal for humid areas | ↗ Corrosion-resistant for various environments |
| Weight | Lightweight | ↗ Lightweight with solid feel |
| Application | Standard residential use | ↗ Residential & light commercial use |
| Positioning | Cost-effective option | ↗ Upgraded material option |

Performance characteristics may vary by configuration and customer requirements.

Lightweight & Easy Operation

Room Darkening Performance

Refined Aluminum Construction



# Compliance Summary




| | |
|---|---|
| WCMA | Compliant |
| PFWBS | Compliant |
| CPSIA (Lead-Free) | Compliant |
| Chemical Safety | Compliant |

# Measurement Guide

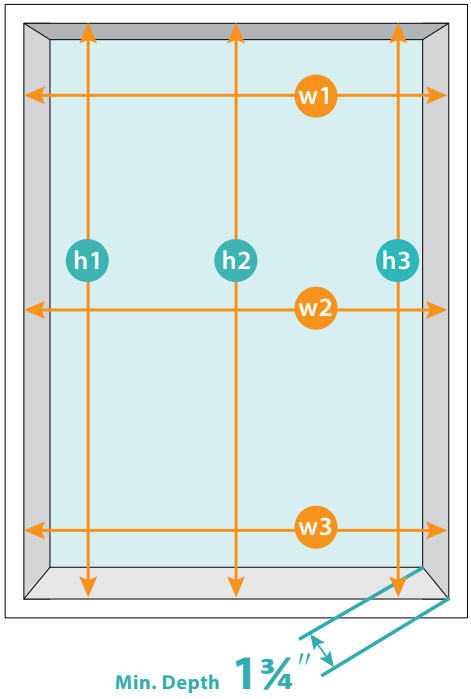


## INSIDE MOUNT

- Width: Use the **smallest** of the three measurements (W1, W2, W3). Then subtract ¼ inch to ensure a proper fit. Finally, choose the next size down from our available widths.

  If your window measures
  - Width 24 ½″, subtract ¼″ → 24 ¼″ ☑ Choose size **24**″
  - Width 24″, subtract ¼″ → 23 ¾″ ☑ Choose size **23**″

  Reminder : After subtracting ¼″, just pick the closest size that's not larger than your adjusted width.

- Height: **Largest** of inside framed height (h1, h2, h3). Choose the height that matches or exceeds the window length.

- Depth: 1¾″ required. Ensure no obstacles.

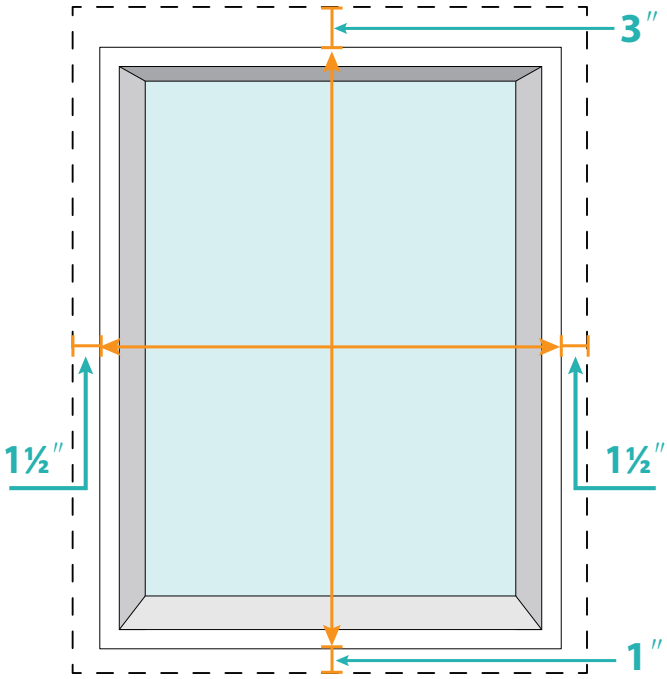


## OUTSIDE MOUNT

- Width: Include window trim and **add 1½″ on each side**. Round up the nearest width when ordering.
- Height: Include window trim and **add 3″ on top, 1″ on the bottom**. Choose the height that matches or exceeds the window length.
- Depth: Minimum 3″ flat surface above the window required.

The blind width ordered is the actual width
(no width deductions taken).

CHING FENG
HOME FASHIONS

# Mini Blinds



- Safe for children/pets
- Cordless
- Room Darkening
- Privacy
- Easily Raise Lower Blinds
- Simply Care
- Easy Installation
- No Tool Collection
- Moisture Resistance
- Customized

## SIZE OPTIONS

| | |
|---|---|
| Width | 23”- 72” ( Customized available ) |
| Drop | 48”/64”/72” ( Customized available ) |