CHING FENG
HOME FASHIONS





Mini Cellular Shades

1 inch cellular shades feature a lightweight, space-efficient design with a honeycomb structure that supports light filtering, privacy, and thermal comfort.
Cordless operation allows simple, safe use, while flexible installation options make them suitable for a wide range of residential and light commercial applications.

INDEX



001

1" Cordless Light Filtering Cellular Shades 01



002

1" Cordless TDBU Light Filtering Cellular Shades 04



CHING FENG
HOME FASHIONS



UP
Upgraded

1” Cordless

Light Filtering Cellular Shades

Model No. QC

CERTIFIED BEST FOR KIDS™

PARENTS FOR LAB TESTED Mom APPROVED WINDOW BLIND SAFETY™

Cellular





Product Introduction

Light filtering cellular shades provide a clean and modern window covering solution with balanced light control and privacy. The honeycomb structure helps improve thermal comfort and reduce outside noise for a more comfortable indoor environment. A child-safe cordless system allows smooth and reliable everyday operation. Made with non-woven polyester material, these shades support flexible installation and are suitable for residential and light commercial applications.

SPECIFICATIONS

Product Name	1" Cordless Light Filtering Cellular Shades
Model No.	QC
Cell Width	1 inch
Width Range	18"~72",(Customized available)
Length Range	48"/64"/72" ,(Customized available)
Color	White, Cream, Gray Cloud, Linen, (Customized available)
Material	100% Non-woven Polyester/ rPET
Control	Cordless Lift System
Mount Type	Inside & Outside Mount
Mounting Bracket	Screw Mount, No Tool Installation
Width Deduction	¼" , ½", or Customized per Requirement
Certification	Child Safe, Cordless, RCS
CPSIA Total Lead Content	Compliant
Color Fastness	40 hrs, Class 4.0
Cycle Test	3000 cycles

Features & Benefits

Light Filtering & Privacy Balance

- Cellular structure supports balanced light filtering while maintaining privacy.
- Helps create a comfortable indoor environment across various spaces.

Cordless Easy Operation

- Cordless design supports safer use in environments with children and pets.
- Smooth operation allows easy adjustment for everyday use.

Thermal Efficiency & Noise Reduction

- Honeycomb structure helps regulate indoor temperature for improved comfort.
- Supports the reduction of outside noise for a more controlled environment.

Sustainable Material & Versatile

- Application made with non-woven polyester, incorporating recycled material content.
- Suitable for residential and light commercial spaces with flexible installation options.



Energy Saver



Inside Mount & Outside Mount



ECO- Friendly Fabric

CHING FENG
HOME FASHIONS



UP
Upgraded

1” Cordless TDBU

Light Filtering Cellular Shades

Model No. QG

CERTIFIED BEST FOR KIDS™

PARENTS FOR LAB TESTED Mom APPROVED WINDOW BLIND SAFETY™

Cellular





Product Introduction

Top down bottom up cellular shades provide flexible control of natural light and privacy through adjustable top and bottom positioning. The honeycomb structure helps improve thermal comfort while reducing outside noise for enhanced indoor comfort. A child-safe cordless system supports smooth and reliable operation. Made with non-woven polyester material, these shades offer flexible installation options for residential and light commercial applications.

SPECIFICATIONS

Product Name	1" Cordless TDBU Light Filtering Cellular Shades
Model No.	QG
Cell Width	1 inch
Width Range	18"~72",(Customized available)
Length Range	48"/64"/72" ,(Customized available)
Color	White, Gray Cloud, Alabaster, (Customized available)
Material	100% Non-woven Polyester/ rPET
Control	Cordless Lift System
Mount Type	Inside & Outside Mount
Mounting Bracket	Screw Mount, No Tool Installation
Width Deduction	¼", ½", or Customized per Requirement
Certification	Child Safe, Cordless, RCS
CPSIA Total Lead Content	Compliant
Color Fastness	40 hrs, Class 4.0
Cycle Test	3000 cycles

Features & Benefits

Top Down Bottom Up Functionality

- Adjustable top and bottom positioning supports flexible light and privacy control.
- Allows natural light entry while maintaining indoor privacy.

Cordless Easy Operation

- Cordless design supports safer use in environments with children and pets.
- Smooth operation allows easy adjustment for everyday use.

Thermal Efficiency & Noise Reduction

- Honeycomb structure helps regulate indoor temperature for improved comfort.
- Supports the reduction of outside noise for a more controlled environment.

Sustainable Material & Versatile Application

- Made with non-woven polyester, incorporating recycled material content.
- Suitable for residential and light commercial spaces with flexible installation options.



Energy Saver



Inside Mount & Outside Mount



ECO- Friendly Fabric

Cell Size Selection Guide

Feature	1" Cell	1.5" Cell	2" Cell
Insulation Performance	Standard insulation	Better energy efficiency	Enhanced thermal performance
Space Efficiency	Slim profile for tighter spaces	Versatile for most applications	Deeper structure for larger spaces
Application	Apartments, offices, small rooms	Living rooms, bedrooms	Large residential or commercial spaces
Market Positioning	Standard everyday option	Mid-range versatile option	Premium large-window solution

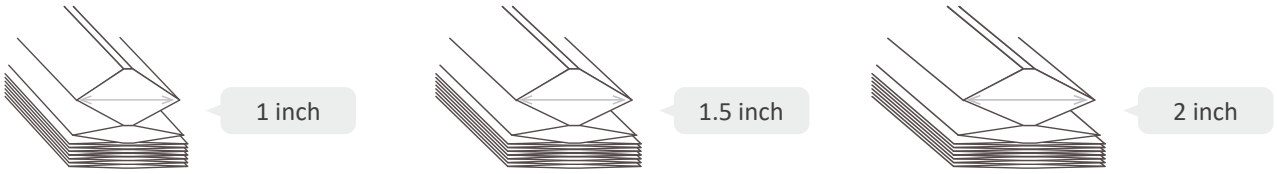



Compliance Summary



WCMA	Compliant
PFWBS	Compliant
CPSIA (Lead-Free)	Compliant
Chemical Safety	Compliant

Measurement Guide

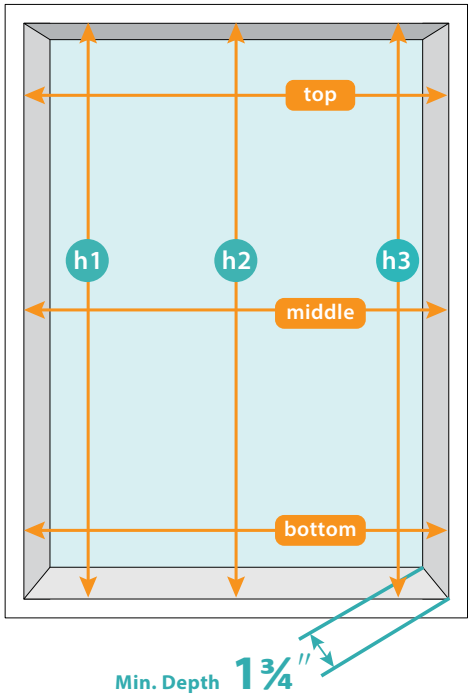

INSIDE MOUNT

- Width:

  Step 1: Measure the width at the top, middle, and bottom inside of your window opening. Use the **smallest** measurement.

  Step 2: **Subtract ¼** inch from that number.

  Step 3: Round **down to the nearest size** when ordering.

- Height: **Largest** of inside framed height (h1, h2, h3). Choose the height that matches or exceeds the window length.

- Depth: **1¾″** required. Ensure no obstacles.

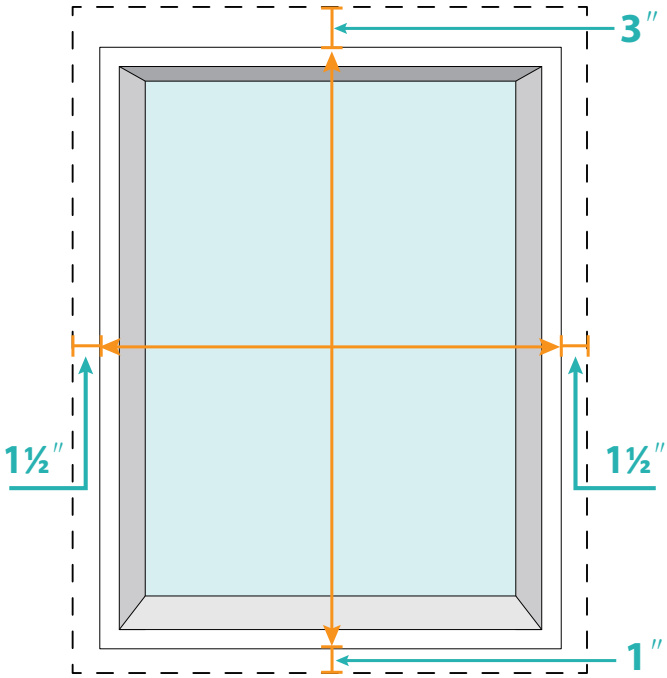

OUTSIDE MOUNT

- Width: Include window trim and **add 1½″ on each side**. Round up the nearest width when ordering.
- Height: Include window trim and **add 3″ on top, 1″ on the bottom**. Choose the height that matches or exceeds the window length.
- Minimum 3″ flat surface above the window required.

The blind width ordered is the actual width
(no width deductions taken).

CHING FENG
HOME FASHIONS

1 inch Cellular Shades



Safe for children/pets

Thermal Insulation

Noise Reduction

Light Filtering

Privacy

Cordless Design

Easy Operation

Easy Installation

No Tool Collection

Customized

SIZE OPTIONS

Width	18”-72” (Customized Avaliable)
Drop	48”/64”/72” (Customized Available)