CHING FENG
HOME FASHIONS



Roman Shades

Roman shades feature a soft, elegant fabric design that adds warmth and texture to interior spaces while providing light control, privacy, and a refined decorative look. Cordless operation supports smooth and child-safe everyday use, while versatile fabric selections and installation options make them suitable for a variety of residential settings and design styles

INDEX

001

Cordless Blackout Classic Roman Shades 01

002

Cordless Blackout Roman Cellular Shades 05



003

Cordless Blackout Magnetic Fold-Up Roman Shades 09



CHING FENG
HOME FASHIONS



UP
Upgraded

Cordless Blackout Classic
Roman Shades

Model No.3S

CERTIFIED BEST FOR KIDS

PARENTS FOR LAB TESTED Mom APPROVED WINDOW BLIND SAFETY

Roman



Product Introduction

Blackout Classic Roman Shades combine soft fabric styling with functional light control to create a warm and comfortable interior atmosphere. Layered fabric construction helps provide privacy, gentle light filtering, and improved room comfort, while the cordless lift system ensures smooth, child-safe operation for everyday use. Made with durable woven fabric materials, they offer a refined appearance with easy everyday maintenance. Available in multiple sizes and fabric options with flexible installation solutions for a variety of residential applications.

SPECIFICATIONS

Product Name	Cordless Blackout Classic Roman Shades
Model No.	3S
Width Range	20" - 72" (Customized available)
Length Range	18" - 72" (Customized available)
Color	White, Light Gray, Gray , Linen ,Gream ,Seamist ,Indigo (Customized Available)
Material	100% Polyester
Control	Cordless Lift System
Mount Type	Inside & Outside Mount
Mounting Bracket	Screw Mount, No Tool Installation
Width Deduction	1" or Customized per Requirement
CPSIA Total Lead Content	Compliant
Color fastness	40 hrs, Class 4.0
cycle test	3000 cycles
pH Value of Water Extract	PASS
Tear Strength	PASS

Features & Benefits

Elegant Fabric Appearance

- Soft fabric construction provides a clean and refined look across various interior styles.
- Layered folds add visual texture and enhance overall window presentation.

Light Control & Privacy

- Designed to support balanced natural light filtering and everyday privacy.
- Available in multiple fabric opacities for different lighting and comfort preferences.

Cordless Safety & Smooth Operation

- Cordless lift system supports safer use around children and pets.
- Smooth raising and lowering operation provides a clean, modern appearance.

Versatile Design & Application

- Available in a variety of colors, textures, and fabric selections.
- Suitable for bedrooms, living rooms, dining spaces, and other residential interiors.



Thermal backing fabric
For room darkening



Cordless Operation



Easy To Clean

Traditional Corded Roman Shades vs. Cordless Roman Shades

Feature	Corded Roman Shades (Traditional)	Our Cordless Classic Roman Shades
Operation System	Pull cord control	↗ Cordless lift system
Child Safety	Risk of cord entanglement	↗ Safe cordless design
Appearance	Visible hanging cords	↗ Clean, minimal look
User Experience	Requires manual cord adjustment	↗ Smooth lift & stop control
Maintenance	Cords may tangle or wear out	↗ Lower maintenance structure
Overall Safety	Basic standard safety	↗ Enhanced child & pet safety

Performance characteristics may vary by configuration and customer requirements.

Cordless Safety Upgrade

Clean Modern Aesthetic

Smooth Lift Control



CHING FENG
HOME FASHIONS



UP
Upgraded

Cordless Blackout
Roman Cellular Shades

Model No.3Q

CERTIFIED BEST FOR KIDS

PARENTS FOR LAB TESTED Mom APPROVED WINDOW BLIND SAFETY





Product Introduction

Combining Roman-style folds with cellular insulation, this cordless blackout shade delivers enhanced privacy, light control, and energy efficiency in a clean, modern look.
The cordless lift system ensures safe, smooth operation, making it ideal for child- and pet-friendly spaces. Available in custom cut-to-width or standard sizes with easy installation options for quick setup.

SPECIFICATIONS

Product Name	Cordless Blackout Roman Cellular Shades
Model No.	3Q
Width Range	20" - 72" (Customized available)
Length Range	18" - 72" (Customized available)
Color	White, Navy , Chocolate , Light Gray , Ivory , Khaki (Customized Available)
Material	100% Polyester
Control	Cordless Lift System
Mount Type	Inside & Outside Mount
Mounting Bracket	Screw Mount
Width Deduction	1" or Customized per Requirement
CPSIA Total Lead Content	Compliant
Color fastness	40 hrs, Class 4.0
cycle test	3000 cycles
pH Value of Water Extract	PASS
Tear Strength	PASS

Features & Benefits

Blackout Light Control

- Blackout fabric helps reduce outside light for improved privacy and room-darkening performance.
- Suitable for bedrooms, media rooms, and other spaces requiring enhanced light control.

Insulating Cellular Construction

- Cellular backing helps improve insulation and energy efficiency throughout the year.
- Supports indoor comfort by reducing heat transfer and outside noise.

Cordless Safety & Smooth Operation

- Cordless lift system supports safer use around children and pets.
- Smooth operation provides a clean appearance with easy everyday adjustment.

Elegant Roman-Style Appearance

- Combines the soft look of Roman shades with the functional benefits of cellular construction.
- Available in multiple colors and fabric options for various interior styles.



Excellent source of insulationandnoise reduction



Cordless operation with safety in mind



Easy To Clean

Classic Roman Shades vs. Roman Cellular Shades

Feature	Classic Roman Shades	Blackout Roman Cellular Shades
Appearance	Soft fabric folds with a classic decorative appearance	↗ Combines elegant Roman folds with modern cellular construction
Light Control	Light filtering to moderate privacy depending on fabric	↗ Enhanced blackout performance for room darkening
Energy Efficiency	Standard fabric construction with limited insulation	↗ Cellular structure helps improve insulation and temperature control
Comfort Level	Creates a soft and warm interior atmosphere	↗ Helps reduce outside heat and glare for improved comfort
Design Style	Traditional fabric-focused Roman shade styling	↗ Functional modern style with layered Roman appearance

Performance characteristics may vary by configuration and customer requirements.

Superior Blackout Performance

Energy-Efficient Cellular Design

Child-Safe Cordless Operation



CHING FENG
HOME FASHIONS



UP
Upgraded

Cordless Blackout Magnetic

Fold-Up Roman Shades

Model No.RS-3200

CERTIFIED BEST FOR KIDS™

PARENTS FOR LAB TESTED Mom APPROVED WINDOW BLIND SAFETY™

Roman





Product Introduction

Made with blackout fabric, these Roman shades offer a soft, layered look with effective light control and privacy. The cordless magnetic fold-up design allows manual adjustment and secure positioning at different heights. Supports screw-mounted or drill-free tension rod installation. Removable, washable fabric ensures easy cleaning and maintenance.

SPECIFICATIONS

Product Name	Cordless Blackout Magnetic Fold-Up Roman Shades
Model No.	RS-3200
Width Range	20" - 72" (Customized available)
Length Range	18" - 72" (Customized available)
Color	White, Beidge (Customized available)
Material	100% Polyester
Control	Cordless Lift System
Mount Type	Inside & Outside Mount
Mounting Bracket	Screw Mount, No Tool Installation
Width Deduction	1" or Customized per Requirement
CPSIA Total Lead Content	Compliant
Color fastness	40 hrs, Class 4.0
cycle test	3000 cycles
pH Value of Water Extract	PASS
Tear Strength	PASS

Features & Benefits

Blackout Light Control & Privacy

- Blackout fabric helps block outside light while enhancing indoor privacy.
- Soft, layered Roman shade styling adds a clean and elegant look to interior spaces.

Cordless Magnetic Fold-Up Design

- Manually fold up the shade and secure it at the desired height using magnetic fasteners.
- Cordless operation allows flexible shade positioning without traditional lift cords.

Removable & Washable Fabric

- Removable fabric allows for convenient cleaning and maintenance.
- Easy-care design helps keep the shade clean and fresh for everyday use.

Flexible Installation Options

- Supports both screw-mounted and drill-free tension curtain rod installation.
- Offers flexible mounting options to accommodate different window frames and space requirements.



Thermal backing fabric
For room darkening



Easy To Clean



Magnetic Height Adjustment

Traditional Roman Shades vs. Cordless Magnetic Fold-up Roman Shades

Feature	Traditional Roman Shades	Cordless Magnetic Fold-up Roman Shades
Operating System	Traditional cord--operated lift system	↗ Cordless magnetic fold-up design
Shade Adjustment	Adjusted using a traditional lift cord	↗ Manually fold and secure at the desired height with magnets
Safety	Exposed lift cords may require additional safety measures	↗ Cordless design eliminates traditional lift cords
Light Control	Depends on the selected fabric	↗ Blackout fabric for enhanced light control and privacy
Cleaning & Maintenance	Cleaning method varies by construction	↗ Removable and washable fabric for easy maintenance
Installation Options	Screw-mounted	↗ Screw-mounted or drill-free tension rod installation

Performance characteristics may vary by configuration and customer requirements.

Removable & Washable Fabric

Magnetic Fold-Up Design

Cordless Safety



Compliance Summary



WCMA	Compliant
PFWBS	Compliant
CPSIA (Lead-Free)	Compliant
Chemical Safety	Compliant

Measurement Guide

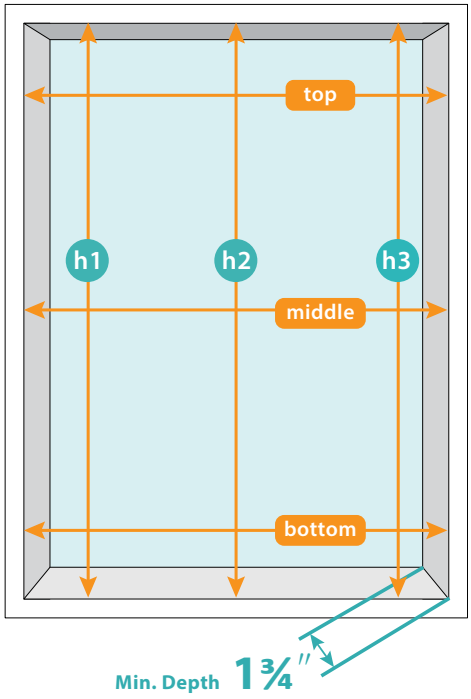

INSIDE MOUNT

- Width:

  Step 1: Measure the width at the top, middle, and bottom inside of your window opening. Use the **smallest** measurement.

  Step 2: **Subtract** 1/4 inch from that number.

  Step 3: Round **down to the nearest size** when ordering.

- Height: **Largest** of inside framed height (h1, h2, h3). Choose the height that matches or exceeds the window length.

- Depth: 1¾″ required. Ensure no obstacles.

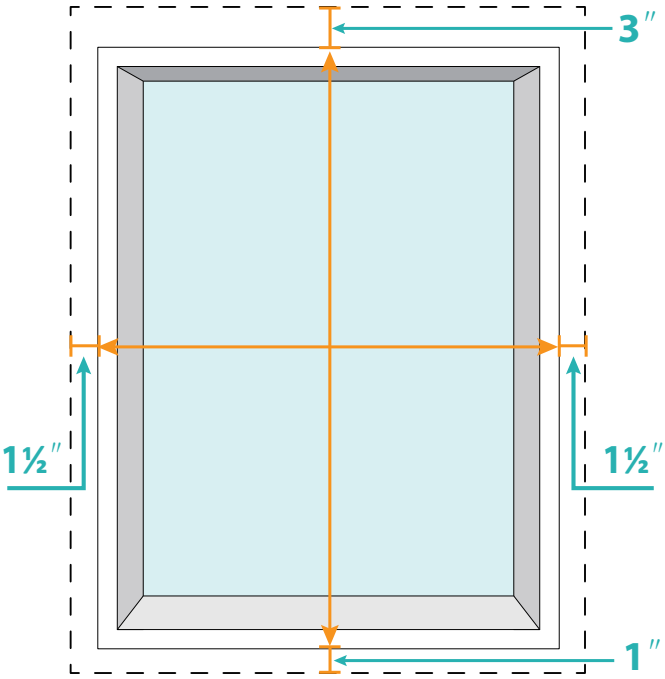

OUTSIDE MOUNT

- Width: Include window trim and **add 1½″ on each side**. Round up the nearest width when ordering.
- Height: Include window trim and **add 3″ on top, 1″ on the bottom**. Choose the height that matches or exceeds the window length.
- Minimum 3″ flat surface above the window required.

The blind width ordered is the actual width
(no width deductions taken).

CHING FENG
HOME FASHIONS

Roman Shades



Safe for children/pets

Easily Raise Lower Blinds

Customized

Easy Installation

Privacy

Simply Care

Cordless

No Tool Collection

SIZE OPTIONS

Width	18”-72” (Customized Avaliable)
Drop	48”/64”/72” (Customized Available)