CHING FENG
HOME FASHIONS





Pleated Shades

Pleated shades combine soft light filtering with a clean, lightweight design suitable for modern interior spaces. Fabric pleat construction helps diffuse natural light while maintaining privacy, creating a comfortable indoor atmosphere. Offering cordless controls and no-tool installation, these shades support easy operation and flexible installation across residential and light commercial applications.

INDEX



001

1" Cordless Light Filtering Pleated Shades 01



002

Tool-Free Temporary Pleated Shades 06



CHING FENG
HOME FASHIONS



1” Cordless

Light Filtering Pleated Shades

Model No: QD

SHADES



Product Introduction

Pleated shades provide a lightweight and streamlined window covering solution with soft light filtering and privacy control. Fabric construction helps diffuse natural light while reducing glare for a more comfortable indoor environment. A child-safe cordless system supports smooth and reliable everyday operation. Available in multiple sizes with flexible installation options, these shades are suitable for residential and light commercial applications.

SPECIFICATIONS

Product Name	1" Cordless Light Filtering Pleated Shades
Model No.	QD
Pleat Width	1 inch
Width Range	20"~72", (Customized available)
Length Range	48"/64"/72", (Customized available)
Color	White, Camel, Ecru, Sliver Gray, Black, (Customized available)
Material	Polyester
Control	Cordless Lift System
Mount Type	Inside & Outside Mount
Mounting Bracket	Screw Mount, No Tool Installation
Width Deduction	¼", ½", or Customized per Requirement
Certification	Child Safe, Cordless
CPSIA Total Lead Content	Compliant
Color Fastness	40hrs, class 4.0
Cycle Test	3000 cycles

Features & Benefits

Soft Light Filtering & Privacy

- Pleated fabric construction helps diffuse natural light while reducing glare.
- Supports balanced light filtering and everyday privacy control.

Cordless Easy Operation

- Cordless design supports safer use in environments with children and pets.
- Smooth operation allows easy adjustment by simply raising or lowering the bottom rail.

Lightweight Fabric Construction

- Made with polyester fabric for a soft appearance and lightweight handling.
- Provides a clean and elegant alternative to standard window blinds.

Flexible Installation & Versatile Application

- Suitable for inside or outside mounting with multiple size options available.
- Designed for residential and light commercial spaces with easy installation.



Versatile Mounting Options

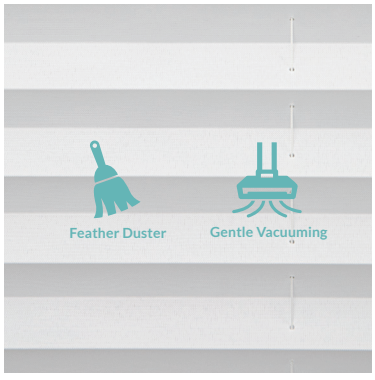

Easy to Clean



Cordless Operation

Upgraded Fabric Specifications Overview

Feature	Standard Paper Pleated Shades	Our Polyester Fabric Pleated Shades
Material Base	Standard paper construction	↗ Polyester fabric construction
Durability	Tear-prone / Low resistance	↗ High tear resistance & lasting durability
Moisture Care	Sags or degrades with humidity	↗ Moisture resistant (Maintains clean pleats)
Light Filtering	Basic or uneven filtering	↗ Soft, uniform light diffusion
Overall Value	Single-use or short-term life	↗ Extended lifespan for reliable temporary use

Performance characteristics may vary by configuration and customer requirements.

Fabric Material Upgrade

Tear Resistance Upgrade

Moisture Resistance Upgrade



Measurement Guide

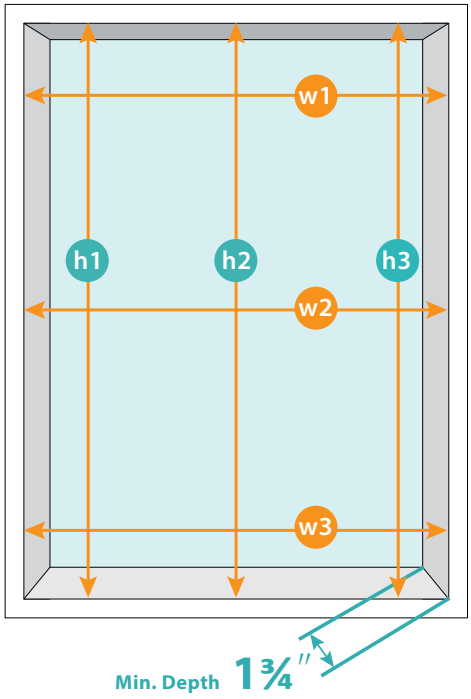

INSIDE MOUNT

- Width:
  - Step 1 Measure the width at the top, middle, and bottom inside of your window opening. Use the **smallest** measurement.
  - Step 2 **Subtract ¼** inch from that number.
  - Step 3 Round **down to the nearest size** when ordering.
- Height: **Largest** of inside framed height (h1, h2, h3). Choose the height that matches or exceeds the window length.
- Depth: **1 ¾″** required. Ensure no obstacles.

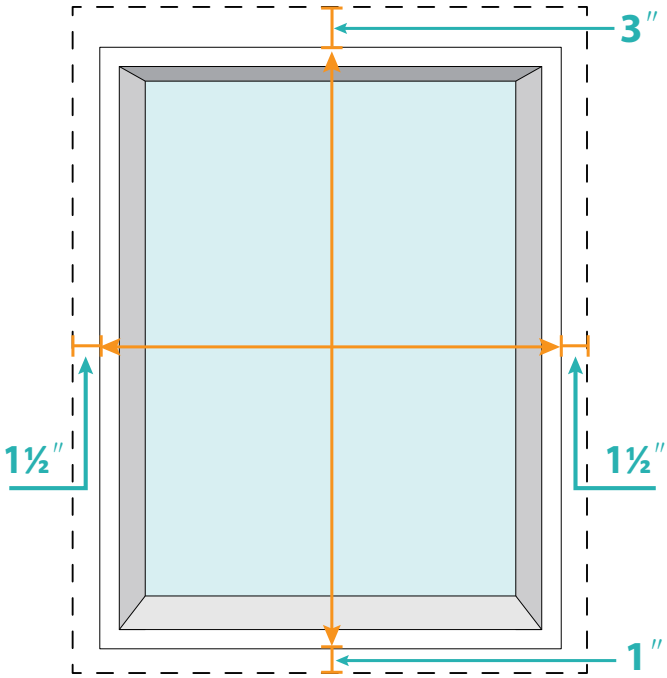

OUTSIDE MOUNT

- Width: Include window trim and **add 1½″ on each side**. Round up the nearest width when ordering.
- Height: Include window trim and **add 3″ on top, 1″ on the bottom**. Choose the height that matches or exceeds the window length.
- Minimum **3″** flat surface above the window required.

The blind width ordered is the actual width
(no width deductions taken)

CHING FENG
HOME FASHIONS



Tool-Free

Temporary Pleated Shades

Model No. 1H1G

CERTIFIED BEST FOR KIDS™

PARENTS FOR LAB TESTED Mom APPROVED WINDOW BLIND SAFETY™

SHADES



Product Introduction

Our tool-free temporary shades offer an instant, hassle-free window covering solution with a clean, minimalist pleated design. Engineered for quick setup, the premium peel-and-stick adhesive backing ensures secure mounting on various surfaces without drills, screws, or brackets. Easily trimmable to fit any window size, these lightweight shades provide immediate light control and privacy, making them ideal for rentals, temporary spaces, or transitioning homes.

SPECIFICATIONS

Product Name	Tool-Free Temporary Pleated Shades
Model No.	1H1G
Width Range	36”, 48” (Easy cut-to-size at home)
Length Range	72" (Easily adjustable with included clips)
Color	White, Anchor Gray
Material	Polyester, rPET
Control	Cordless design (Adjust height with utility clips)
Mount Type	Inside Mount / Trim-to-fit trimming
Mounting Bracket	Peel-and-Stick
Removal Performance	Clean removal without residue or wall damage
Safety Standard	100% Cordless (Certified Child & Pet Safe)
CPSIA Total Lead Content	Compliant

Features & Benefits

100% Drill-Free Installation

- No tools, drills, screws, or brackets required for quick setup.
- Trim at home and stick directly onto the window frame for a flexible fit.

Soft Light Filtering & Privacy

- Fabric pleated shade helps softly filter sunlight for a comfortable indoor glow.
- Provides everyday privacy for windows, cabinets, and temporary spaces.

Sustainable Recycled Material

- Made with 100% recycled polyester from recycled plastic bottles.
- Supports eco-conscious product programs and temporary living needs.

Versatile Temporary Solution

- Suitable for homes, apartments, dorms, RVs, campers, and remodeling projects.
- Can be used as window shades, cabinet covers, room dividers, or layered privacy panels.



Easy to install



Cordless operation
Hold with clip



Fabric made from
Recycled material

Measurement Guide

CUT TO DESIRED SIZE

WxH **| 36x72 inches**
Fit Window **| 12-36”W x 45”-60”H**

Make it your size!

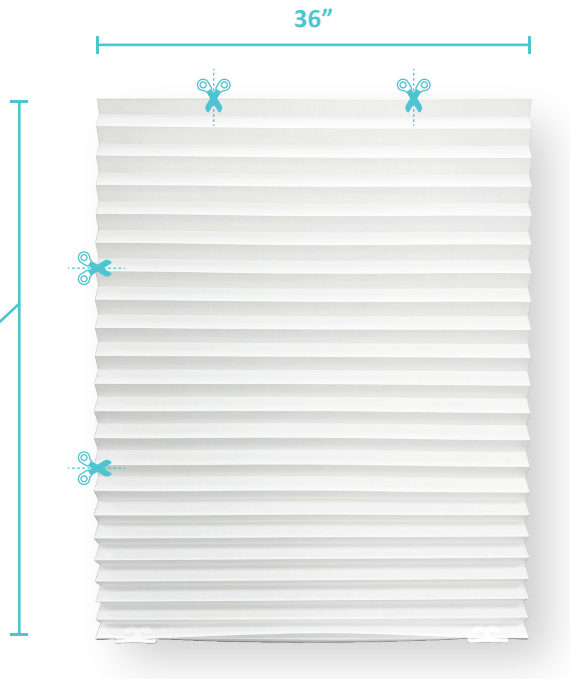

JOIN TO EXTEND!

1 pack (4 pieces)
can fit 72”W x 120”H window

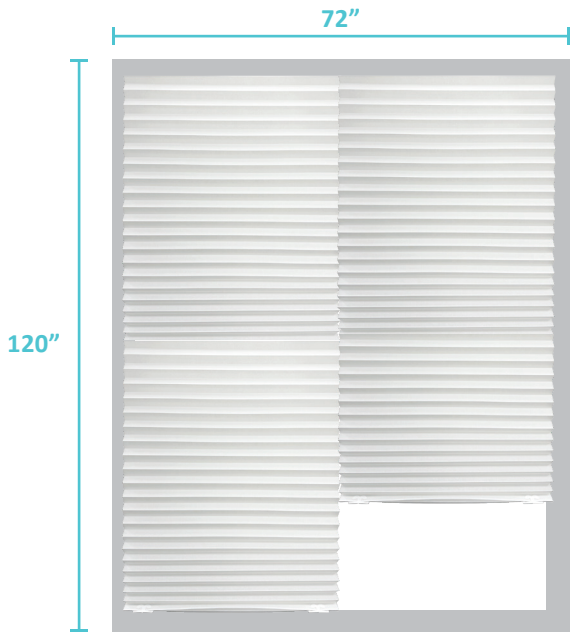

Product Upgrade Overview

Feature	Standard Paper Shades	Our Non-Woven Fabric
Mounting Hardware	Screws & drills required	↗ Tool-free adhesive rail
Setup & Timing	Requires measuring & tools	↗ 30-second instant setup
Light Experience	Slats leak harsh light lines	↗ Soft, uniform light diffusion
Fabric Structure	Standard Paper Material	↗ Upgraded Nonwoven Fabric
Rental Friendliness	Low (leaves permanent holes)	↗ High (clean, effortless removal)

Performance characteristics may vary by configuration and customer requirements.

Drill-Free Upgrade

Crisp Pleat Upgrade

Surface Care Upgrade



Compliance Summary



WCMA	Compliant
PFWBS	Compliant
CPSIA (Lead-Free)	Compliant
Chemical Safety	Compliant

CHING FENG
HOME FASHIONS



Pleated Shades

- Safe for children/pets
- Thermal Insulation
- Noise Reduction
- Light Filtering
- Privacy
- Cordless Design
- Easy Operation
- Easy Installation
- No Tool Collection
- Customized

SIZE OPTIONS

Width	20”-72” (Customized Avaliable)
Drop	48”/64”/72” (Customized Available)