CHING FENG
HOME FASHIONS



Roller Shades

Roller shades combine clean, modern styling with practical everyday performance. Designed with premium fabrics, they provide reliable light control, enhanced privacy, and lasting durability. Cordless operation offers smooth, effortless use while maintaining a sleek appearance. Available in a variety of fabrics and functional options, Roller Shades are a versatile solution for contemporary residential spaces.

INDEX

001

Cordless Room Darkening Zebra Roller Shades 01



002

Cordlessc Room Darkening FreeStop Roller Shades 05

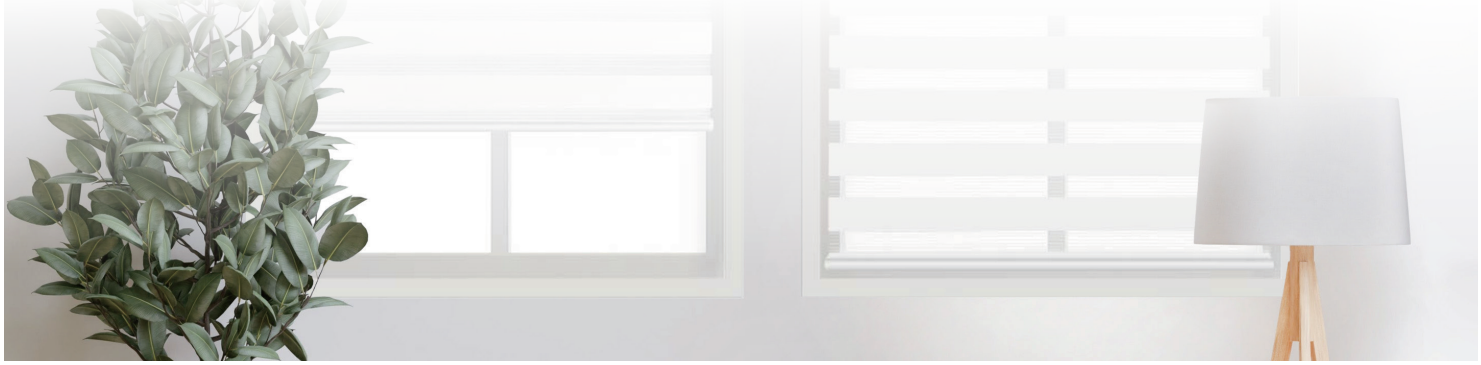

CHING FENG
HOME FASHIONS



UP
Upgraded

Cordless Room Darkening

Zebra Roller Shades

Model No.3T

CERTIFIED BEST FOR KIDS

PARENTS FOR LAB TESTED Mom APPROVED WINDOW BLIND SAFETY



Product Introduction

Featuring an innovative dual-layer fabric design with alternating sheer and solid room-darkening bands. Easily align the panels to transition smoothly between open light filtration and complete privacy.

SPECIFICATIONS

Product Name	Cordless Room Darkening Zebra Roller Shades
Model No.	3T
Width Range	20" - 72" (Customized available)
Length Range	18" - 72" (Customized available)
Color	White, Gray , Black (Customized available)
Material	100% Polyester
Control	Cordless Lift System
Mount Type	Inside & Outside Mount
Mounting Bracket	Screw Mount, No Tool Installation
Width Deduction	1" or Customized per Requirement
CPSIA Total Lead Content	Compliant
Color Fastness	40 hrs, Class 4.0
cycle Test	3000 cycles
PH Value of Water Extract	PASS
Tear Strength	PASS

Features & Benefits

Novative Day & Night Light Control

- Dual-layer fabric design supports flexible transition between filtered light and blackout privacy.
- Alternating sheer and blackout bands allow adjustable light control throughout the day.

Cordless Safety & Smooth Operation

- Cordless construction supports safer use around children and pets.
- Smooth operating system provides clean, modern everyday functionality.

Premium Blackout Fabric

- Premium blackout fabric helps reduce outside light and UV exposure.
- Supports improved privacy and indoor comfort across various living spaces.

Easy Installation & Versatile Application

- Suitable for inside or outside mounting with flexible installation options.
- Designed for smooth everyday operation across residential interior spaces.



Dual Textured-Sheer Fabric



Cordless Operation with Safety in Mind



Easy To Clean

Room Darkening Zebra Roller Shades Comparison

Feature	Standard Roller Shades	Our Room Darkening Zebra Roller
Fabric	Single-layer mesh	↗ Premium dual-layer woven fabric
Light Control	Fully open or closed only	↗ Graduated shading (Sheer-to-solid)
Privacy	Blackout for complete light blocking	↗ Alternating sheer and opaque layers for flexible light control
Shielding	Directly blocks outside light	↗ Softens harsh sunlight & glare
Aesthetics	Plain appearance	↗ Modern horizontal stripe decor

Performance characteristics may vary by configuration and customer requirements.

Fabric Layer Upgrade

Weave Density Upgrade

Graduated Shading Upgrade



CHING FENG
HOME FASHIONS



UP
Upgraded

Cordless Room Darkening

FreeStop Roller Shades

Model No.3U

CERTIFIED BEST FOR KIDS

PARENTS FOR LAB TESTED Mom APPROVED WINDOW BLIND SAFETY



Product Introduction

Equipped with a premium cordless mechanism that allows the shade to glide effortlessly and stop exactly at any desired height. Completely safe for homes with children and pets.

SPECIFICATIONS

Product Name	Cordless Room Darkening FreeStop Roller Shades
Model No.	3U
Width Range	20" - 72" (Customized available)
Length Range	18" - 72" (Customized available)
Color	White, Gray (Customized available)
Material	100% Polyester
Control	Cordless Lift System
Mount Type	Inside & Outside Mount
Mounting Bracket	Screw Mount, No Tool Installation
Width Deduction	1" or Customized per Requirement
CPSIA Total Lead Content	Compliant
Color Fastness	40 hrs, Class 4.0
cycle Test	3000 cycles
PH Value of Water Extract	PASS
Tear Strength	PASS

Features & Benefits

Advanced FreeStop Cordless System

- Advanced cordless system allows smooth adjustment and secure positioning at various heights.
- Cord-free operation supports safer use around children and pets.

Room-Darkening Performance

- Light-blocking fabric helps reduce incoming light for improved privacy and comfort.
- Supports enhanced thermal efficiency by reducing heat and cold transfer.

Clean & Modern Roller Design

- Low-profile roller construction provides a clean and streamlined appearance.
- Maximizes outside view when fully raised for a more open interior feel.

Flexible Installation & Everyday Use

- Mounting system supports installation across various window applications.
- Designed for quick setup and smooth everyday operation.



Energy Efficient



Cordless Operation with Safety in Mind



Easy To Clean

Chain Roller Shades vs. Free Stop Roller Shades

Feature	Chain / Spring Blinds	Our Room Darkening FreeStop Roller Shades
Mechanism	Chains or harsh spring-back	↗ Patented FreeStop cordless mechanism
Positioning	Hard to lock / Limited points	↗ Stepless / Any height
Noise	Noisy clanking / Snapping	↗ Smooth, ultra-quiet glide
Safety	Hazardous dangling cords	↗ 100% Cordless
Durability	Springs lose tension quickly	↗ Long-term reliable tension stability

Performance characteristics may vary by configuration and customer requirements.

Cordless Safety Upgrade

Mechanism Precision Upgrade

Silent Glide Performance Upgrade



Compliance Summary



WCMA	Compliant
PFWBS	Compliant
CPSIA (Lead-Free)	Compliant
Chemical Safety	Compliant

Measurement Guide

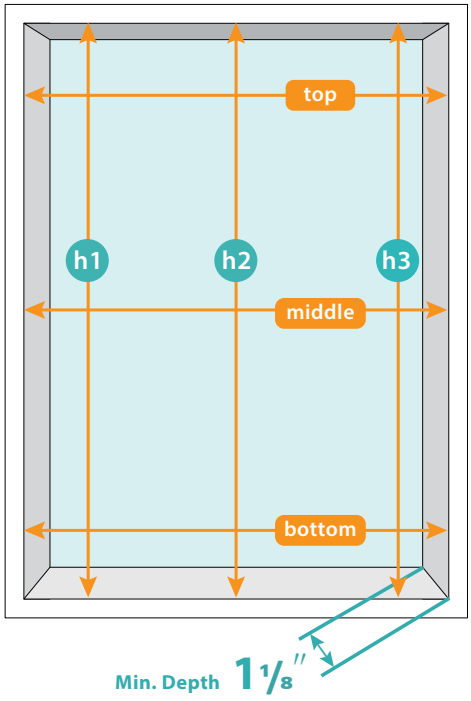

INSIDE MOUNT

- Width:

  Step 1: Measure the width at the top, middle, and bottom inside of your window opening. Use the **smallest** measurement.

  Step 2: **Subtract ¼** inch from that number.

  Step 3: Round **down to the nearest size** when ordering.

- Height: **Largest** of inside framed height (h1, h2, h3). Choose the height that matches or exceeds the window length.

- Depth: **1⅛″** required. Ensure no obstacles.

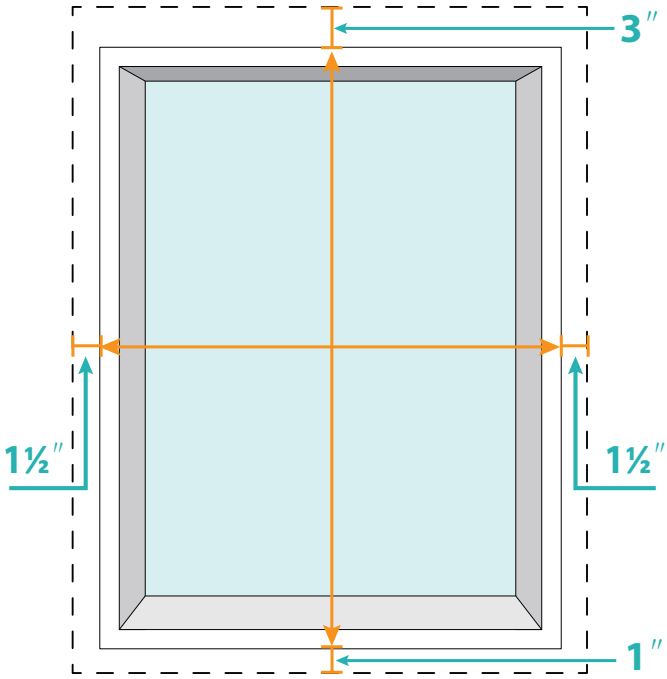

OUTSIDE MOUNT

- Width: Include window trim and **add 1½″ on each side**. Round up the nearest width when ordering.
- Height: Include window trim and **add 3″ on top, 1″ on the bottom**. Choose the height that matches or exceeds the window length.
- Minimum 3″ flat surface above the window required.

The blind width ordered is the actual width
(no width deductions taken).

CHING FENG
HOME FASHIONS

Roller Shades



Safe for children/pets

Cordless

Room Darkening

Privacy

Easily Raise Lower Blinds

Simply Care

Easy Installation

No Tool Collection

Moisture Resistance

Customized

SIZE OPTIONS

Width	18”-72” (Customized Avaliable)
Drop	48”/64”/72” (Customized Available)